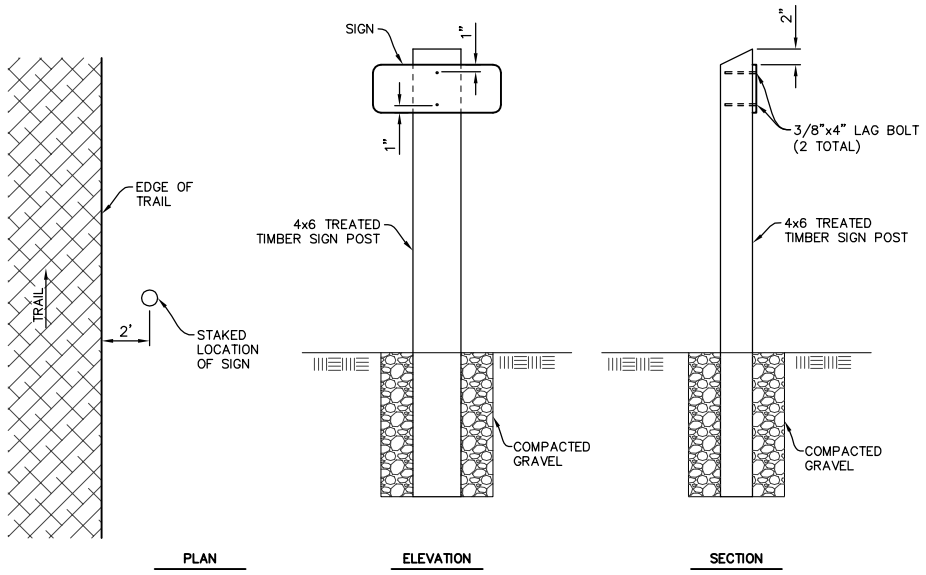

SIGN AND POST DETAIL (Q)
N.T.S

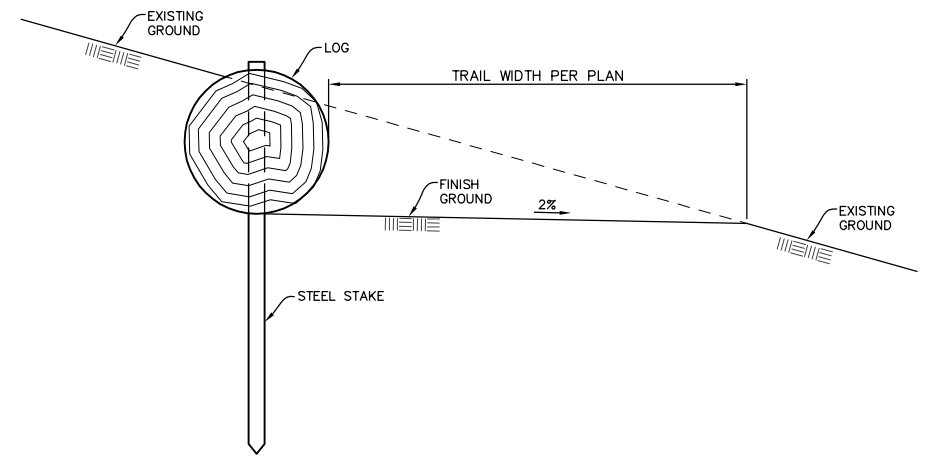

LOG TRAIL WALL (R)
N.T.S

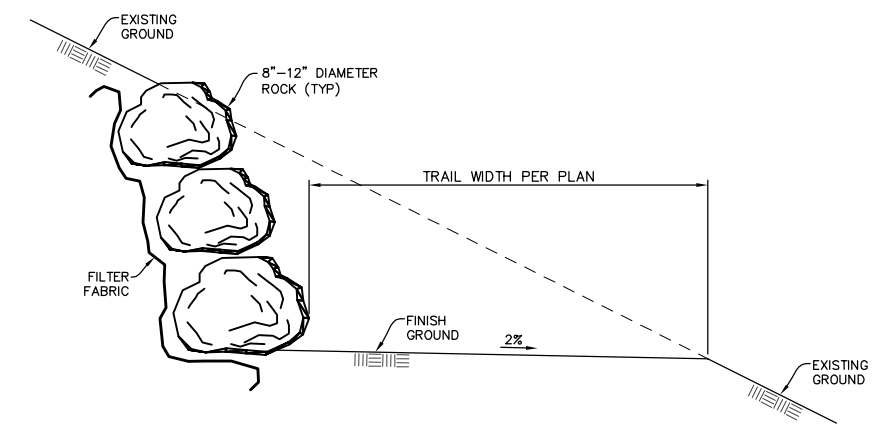

STACKED ROCK TRAIL WALL (S)
N.T.S

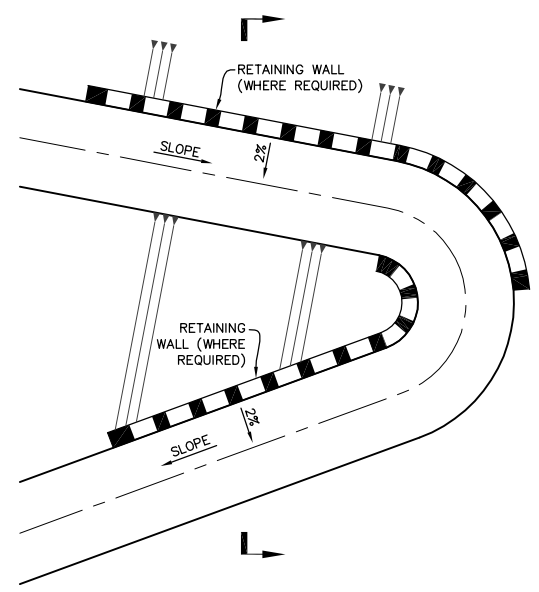

PLAN

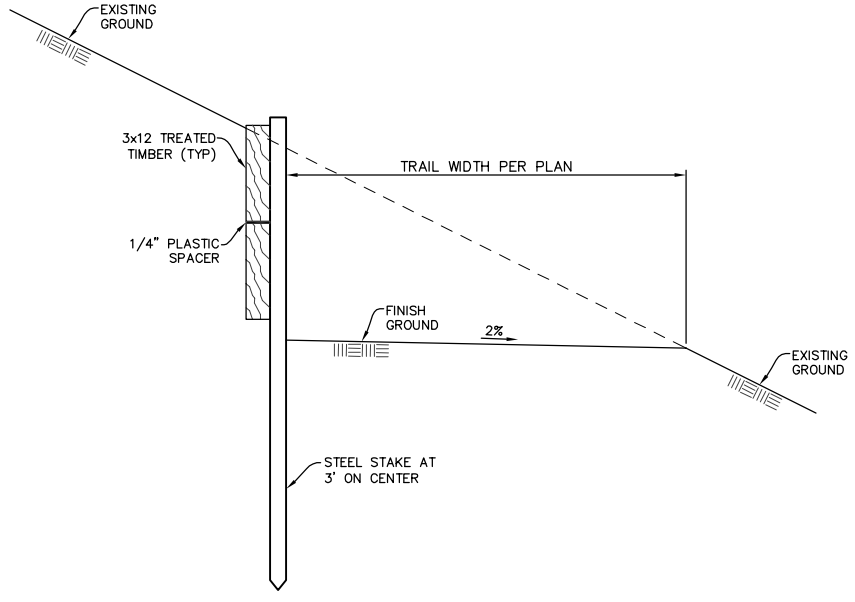

TIMBER TRAIL WALL (T)
N.T.S

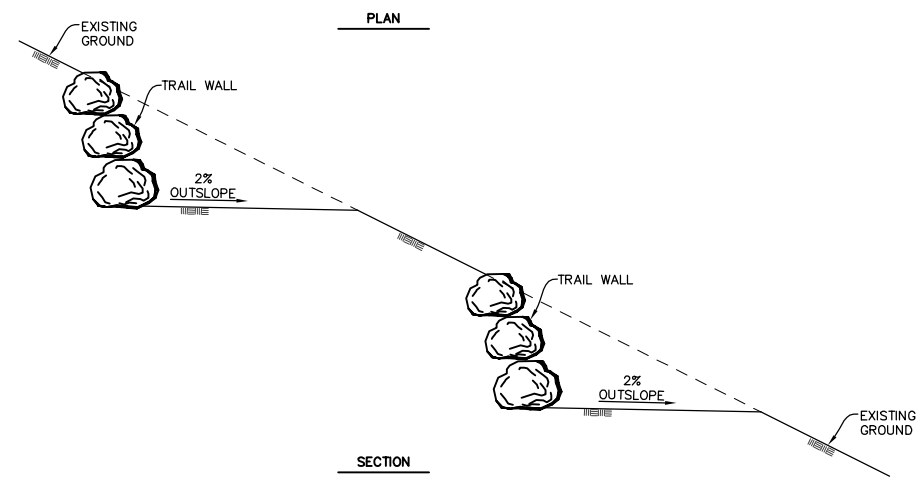

SECTION

TYPICAL CLIMBING TURN (U)
N.T.S

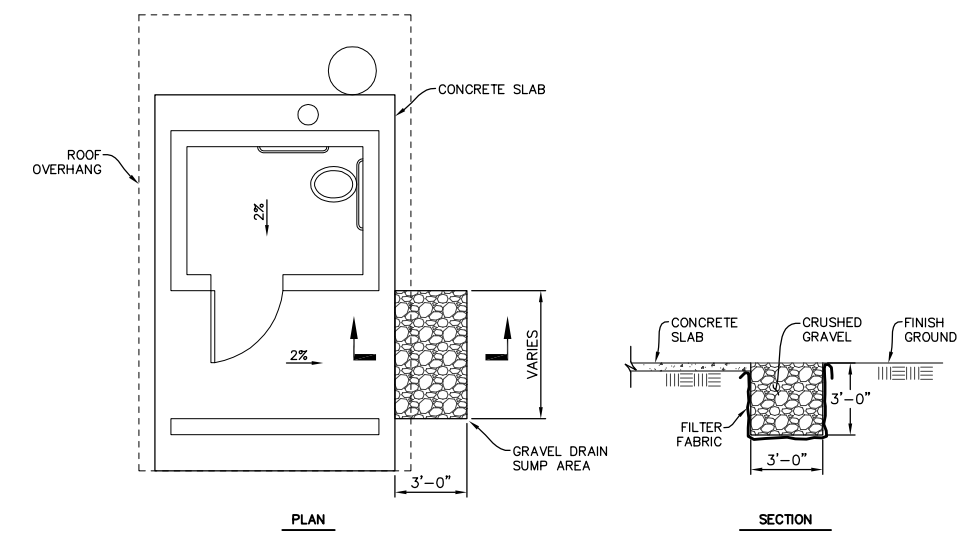

PLAN SECTION

TYPICAL RESTROOM LAYOUT (V)
N.T.S

CONCEPT - PROPOSED PROJECT

DUDEK
621 CHAPALA STREET
SANTA BARBARA, CA 93101
(805) 963–0651

NO.	DATE	REVISIONS	APPD.

Penfield & Smith
Engineers · Surveyors · Planners · Construction Management ·
111 East Victoria Street, Santa Barbara, CA 93101
Phone: (805) 963–9532 Fax: (805) 966–9801

DESIGN JHC CHECKED BEF
BRET. E. FOSTER DATE:
PROJECT ENGINEER
R.C.E. 48,267 (EXP. 06–30–08)

TRAIL AND GRADING DETAILS
–
SANTA MONICA MOUNTAINS CONSERVANCY
MALIBU, CALIFORNIA

P&S PROJECT NO. 13638.05
SHEET 37 OF 63
PLAN DATE JANUARY 10, 2010

34–ENG SAVE DATE: 1/9/2010 2:44:45 PM PLOT BY:Bret Foster PLOT DATE:1/11/2010 5:22:53 PM PLOT SCALE:1:2.73
DRAWING:r:\acad\work\13638\civil\proposed proj 1–10–10\13638_prop_35–38_details.dwg