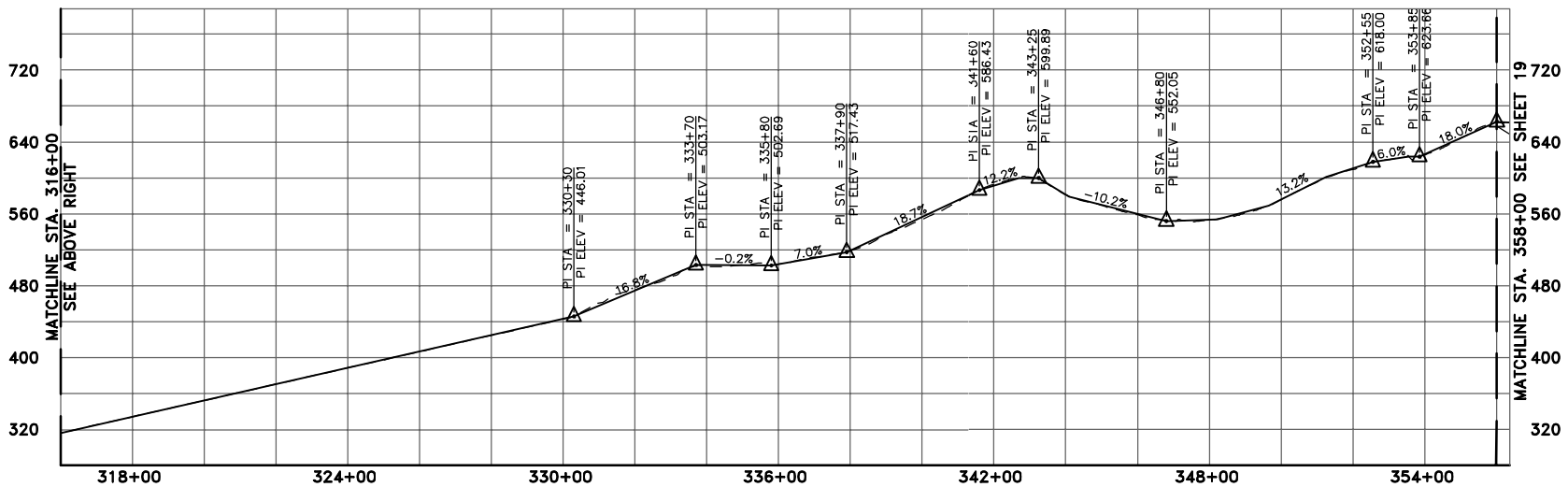

SOLSTICE CANYON TO CORRAL CANYON PROFILE

SCALE: 1"=250' HORZ
1"=100' VERT

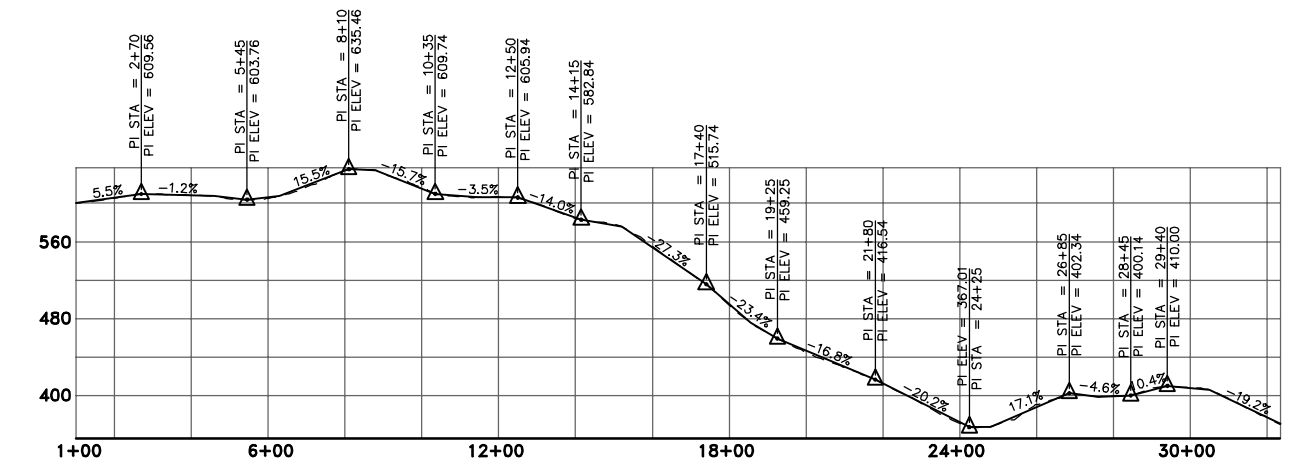

SOLSTICE TRAIL FROM CORRAL CANYON NORTH TO CORRAL CANYON ROAD

SCALE: 1"=250' HORZ
1"=100' VERT

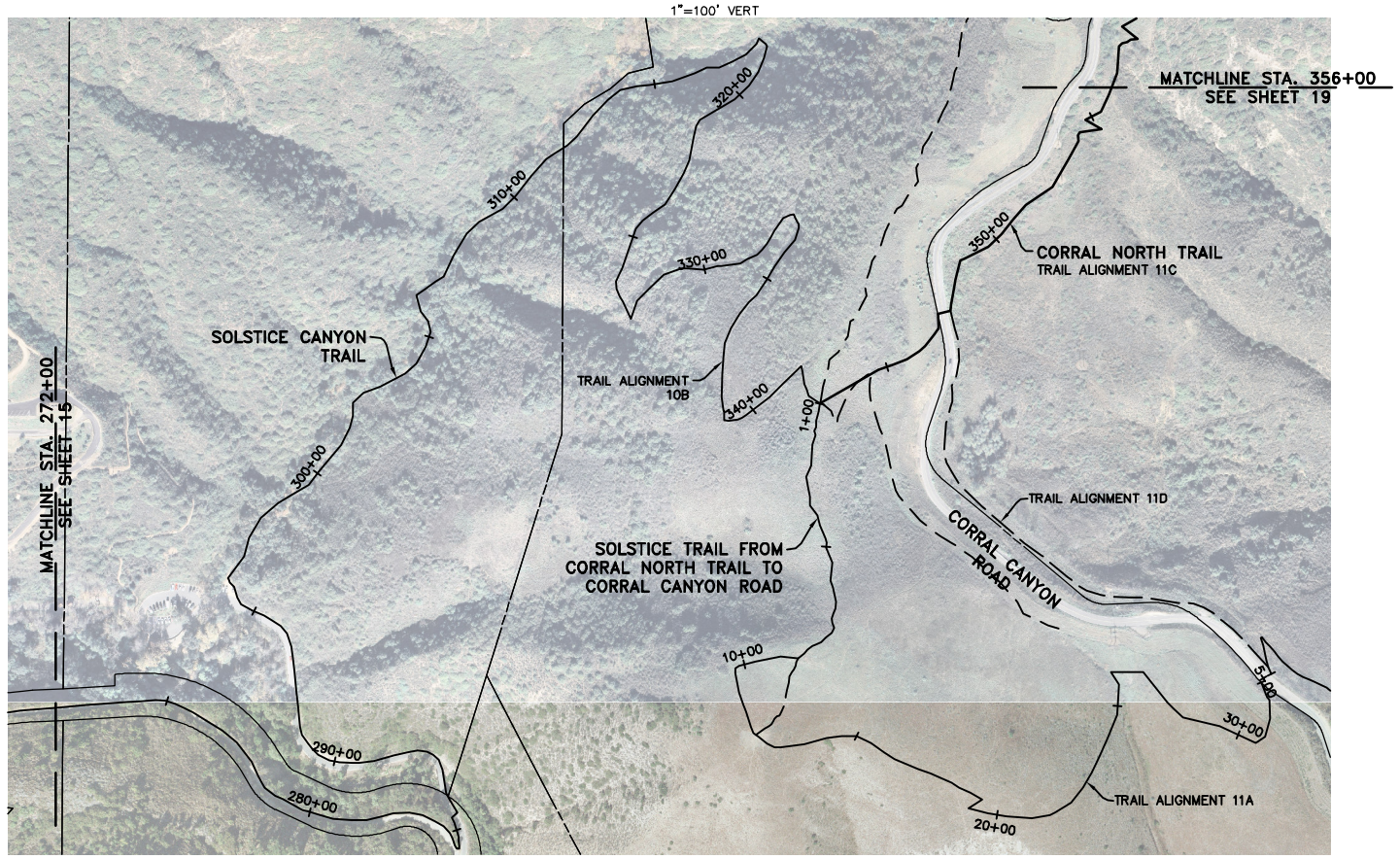

SOLSTICE CANYON TO CORRAL CANYON PLAN

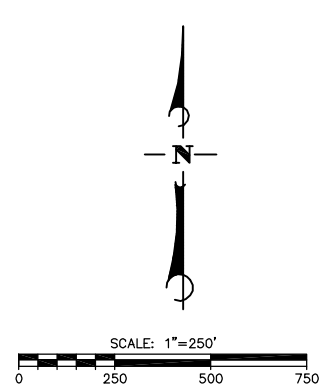

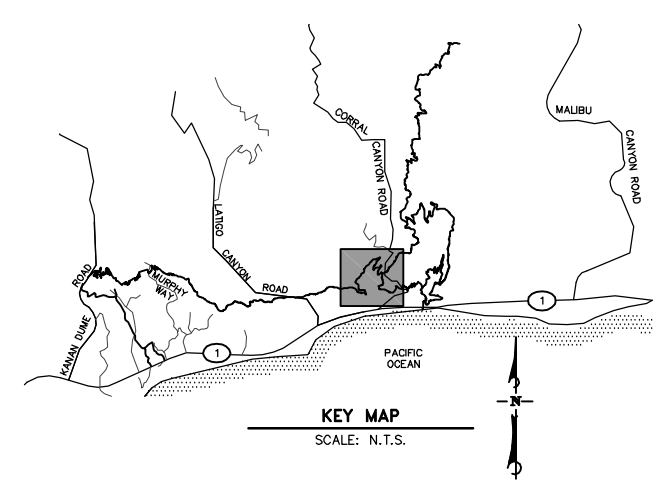

KEY MAP

SCALE: N.T.S.

CONCEPT - 2002 LCP ALTERNATIVE

DUDEK
621 CHAPALA STREET
SANTA BARBARA, CA 93101
(805) 963-0651

NO.	DATE	REVISIONS	APPD.

Penfield & Smith
Engineers · Surveyors · Planners · Construction Management ·
111 East Victoria Street, Santa Barbara, CA 93101
Phone: (805) 963-9532 Fax: (805) 966-9801

DESIGN JHC CHECKED BEF

BRET. E. FOSTER DATE:

PROJECT ENGINEER

R.C.E. 48,267 (EXP. 06-30-10)

PLAN AND PROFILE
SOLSTICE CANYON AND CORRAL CANYON
SANTA MONICA MOUNTAINS CONSERVANCY
MALIBU, CALIFORNIA

P&S PROJECT NO. 13638.05

SHEET 18 OF 63

PLAN DATE JANUARY 14, 2010

34-ENG SAVE DATE: 1/13/2010 7:28:19 PM PLOT BY:Scott Smith PLOT DATE:1/14/2010 5:16:10 PM PLOT SCALE:1:10
DRAWING:r:\acad\work\13638\civil\2002 lcp alt 1-14-10\13638_2002lcp_18-24_pp.dwg