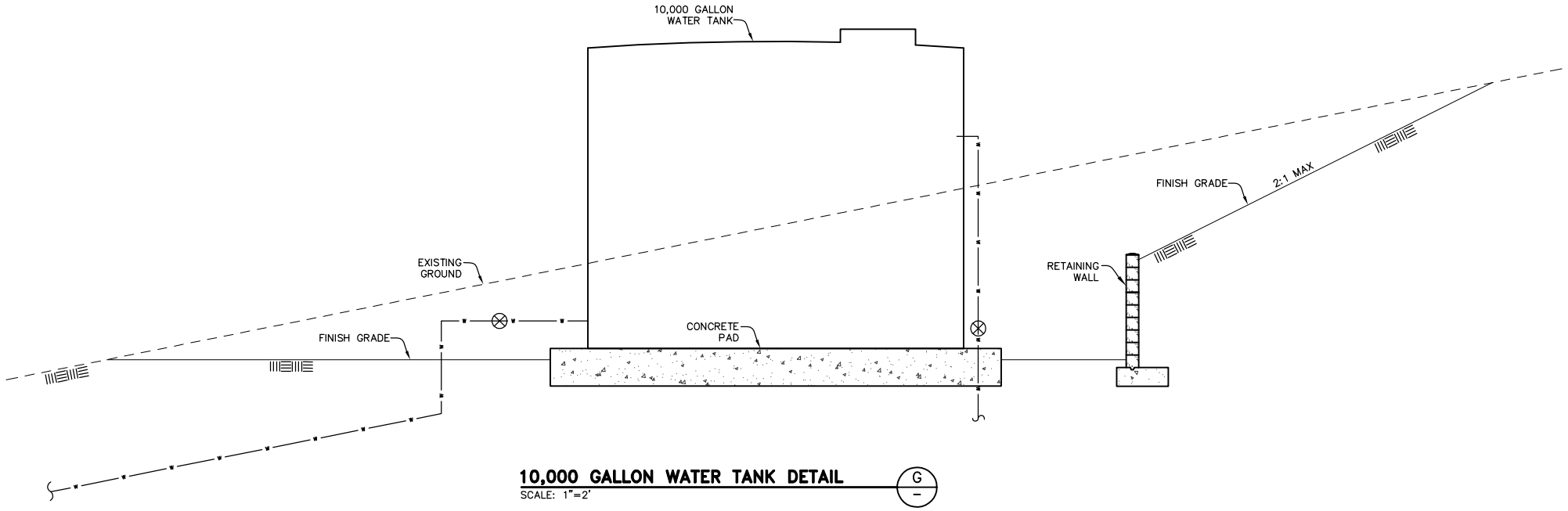

10,000 GALLON WATER TANK DETAIL (G/–)

SCALE: 1"=2'

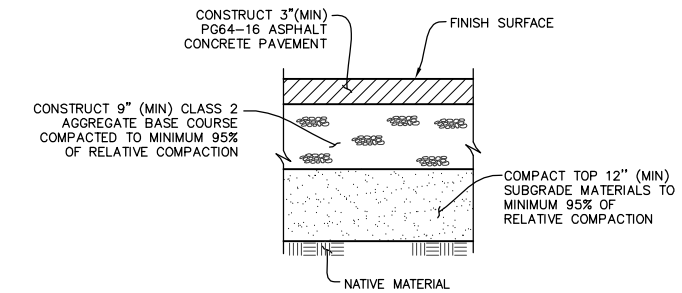

ASPHALT CONCRETE PAVEMENT STRUCTURAL SECTION (H/–)

SCALE: N.T.S.

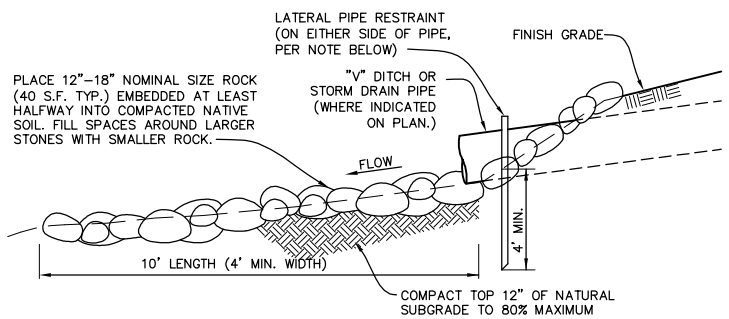

NOTE:
INSTALL LATERAL PIPE RESTRAINTS APPROXIMATELY 2' UPSTREAM FROM THE END OF THE PIPE. ONE ON EACH SIDE. RESTRAINTS SHALL BE MIN. 3" DIAMETER GALVANIZED PIPE, 6' LONG, DRIVEN A MINIMUM OF 4' INTO GROUND. TOP OF 3" PIPE SHALL BE CAPPED.

ROCK RIP-RAP OUTFALL (J/–)

SCALE: N.T.S.

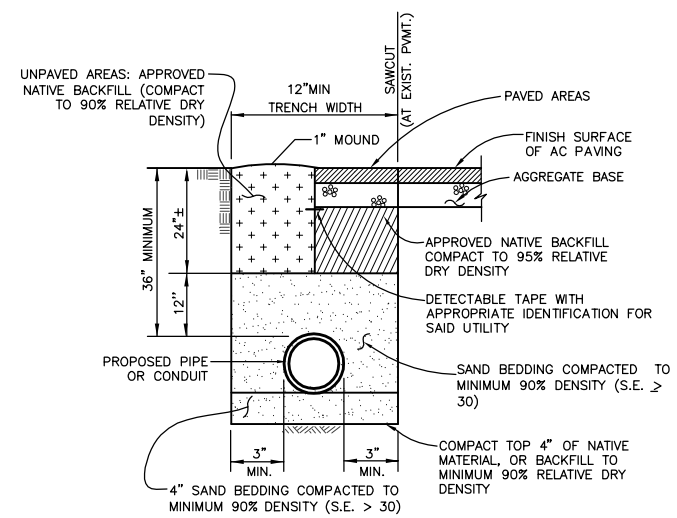

NOTE: CONTRACTOR SHALL VERIFY EXISTING UTILITIES BY POTHOLING PRIOR TO CONSTRUCTION AND MAKE NECESSARY ADJUSTMENTS TO THE UTILITY CONSTRUCTION

TYPICAL UTILITY TRENCH SECTION (K/–)

N.T.S.

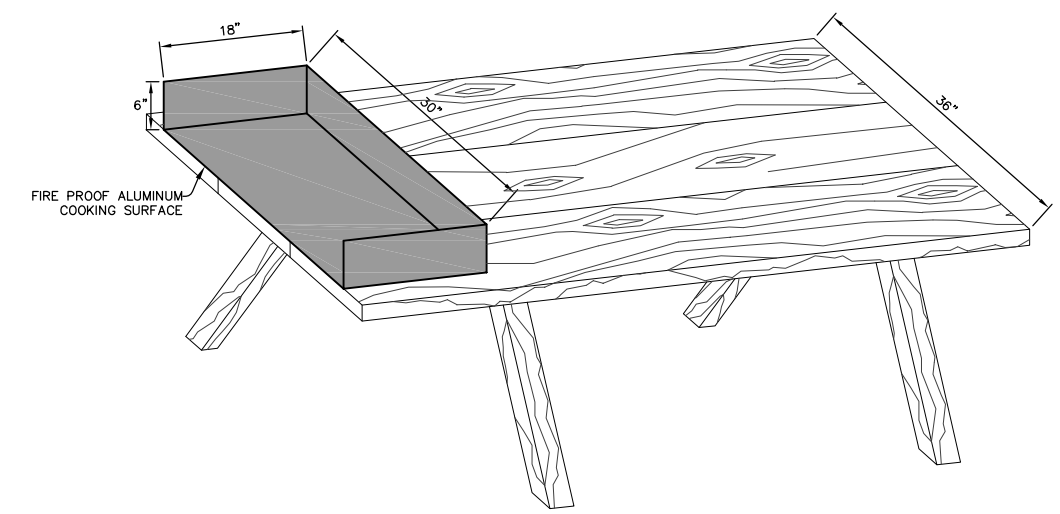

COOKING SURFACE DETAIL (L/–)

N.T.S.

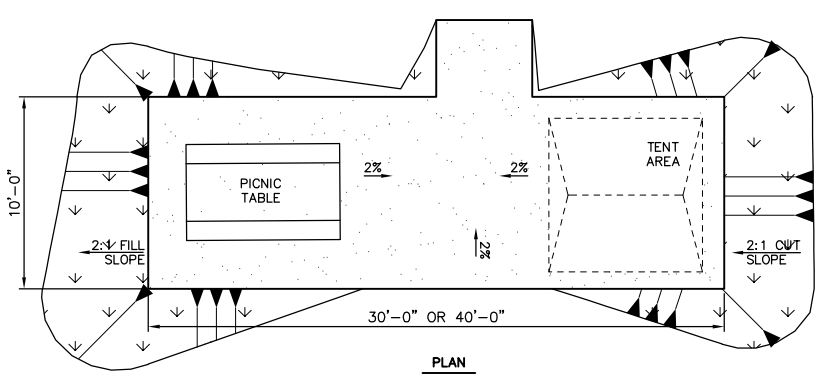

TYPICAL SMALL CAMPSITE TYPE 2 (M/–)

SCALE: 1" = 5'

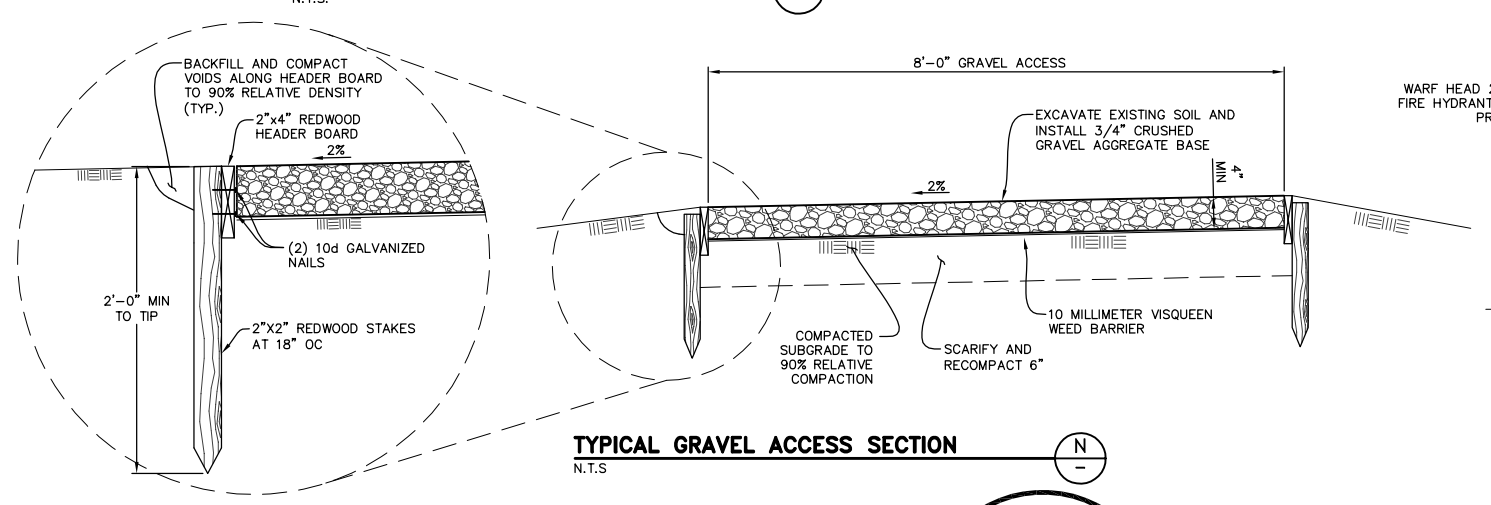

TYPICAL GRAVEL ACCESS SECTION (N/–)

N.T.S

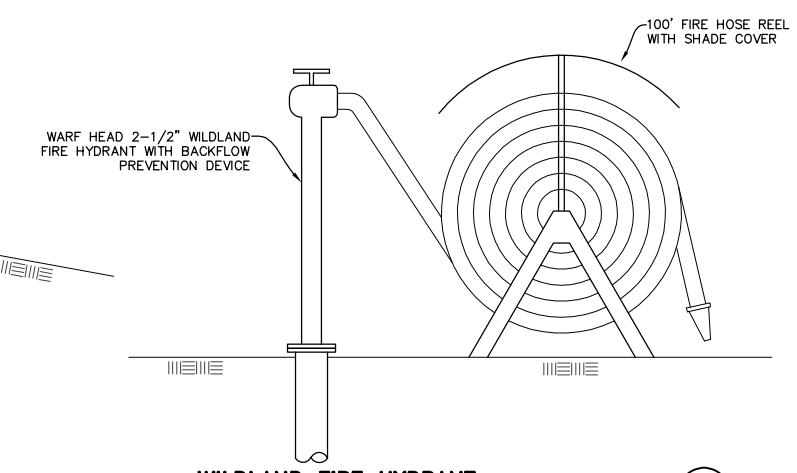

WILDLAND FIRE HYDRANT (P/–)

N.T.S

CONCEPT - 2002 LCP ALTERNATIVE

DUDEK
621 CHAPALA STREET
SANTA BARBARA, CA 93101
(805) 963-0651

NO.	DATE	REVISIONS	APPD.

Penfield & Smith
Engineers · Surveyors · Planners · Construction Management ·
111 East Victoria Street, Santa Barbara, CA 93101
Phone: (805) 963-9532 Fax: (805) 966-9801

DESIGN JHC/BTF CHECKED BEF

BRET. E. FOSTER DATE:
PROJECT ENGINEER
R.C.E. 48,267 (EXP. 06-30-08)

TRAIL AND GRADING DETAILS
–
SANTA MONICA MOUNTAINS CONSERVANCY
MALIBU, CALIFORNIA

P&S PROJECT NO. 13638.05
SHEET 36 OF 63
PLAN DATE JANUARY 14, 2010

34-ENG SAVE DATE: 1/14/2010 6:01:48 PM PLOT BY:Bret Foster PLOT DATE:1/15/2010 10:13:45 AM PLOT SCALE:1:2.73
DRAWING:r:\acad\work\13638\civil\2002 lcp alt 1-14-10\13638_2002lcp_35-38_details.dwg