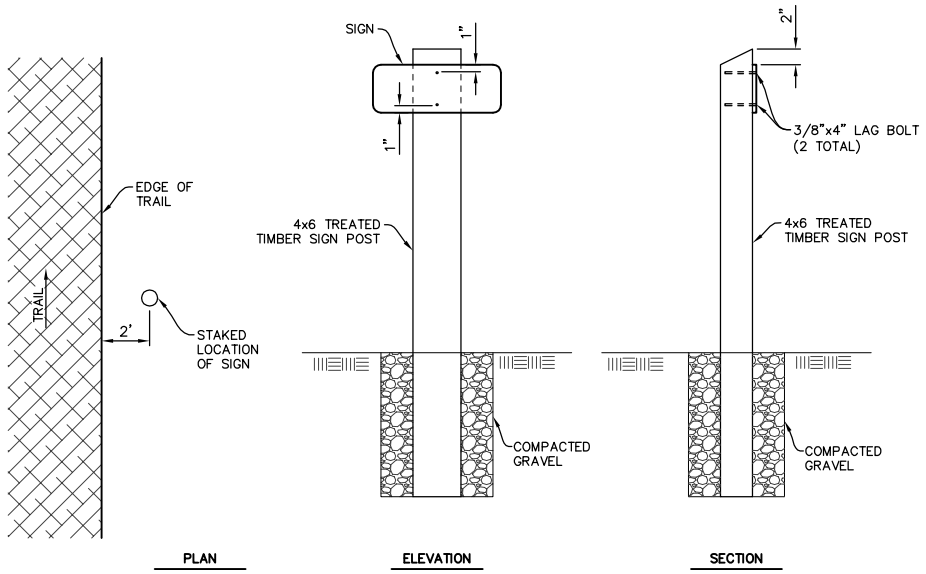


## SIGN AND POST DETAIL (Q)
N.T.S

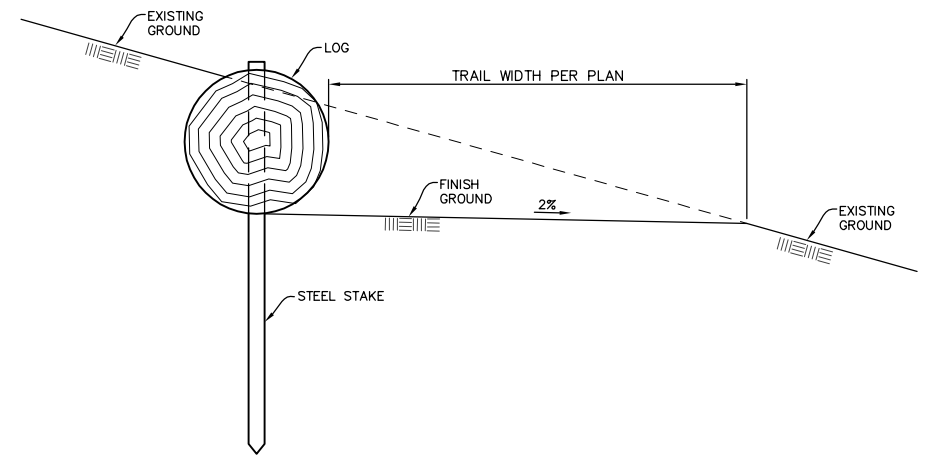


## LOG TRAIL WALL (R)
N.T.S

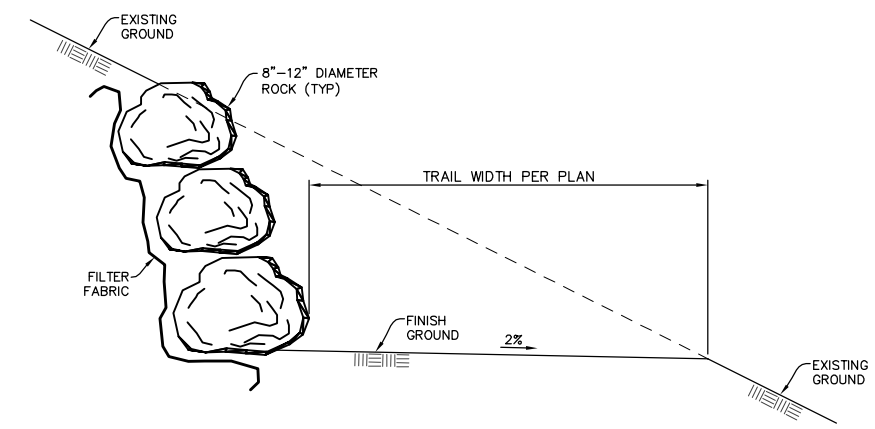


## STACKED ROCK TRAIL WALL (S)
N.T.S

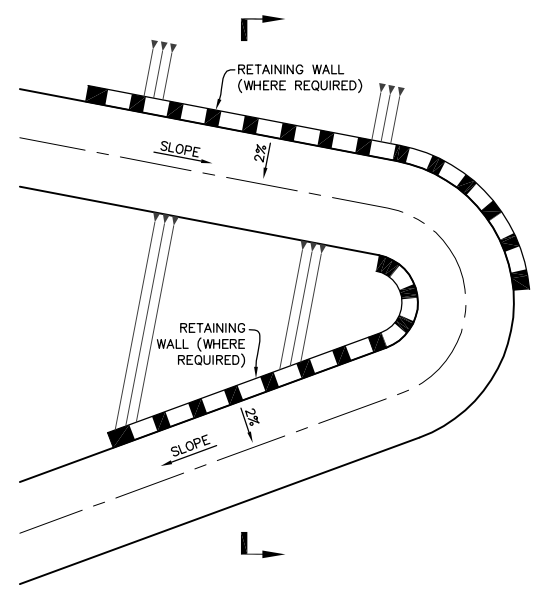


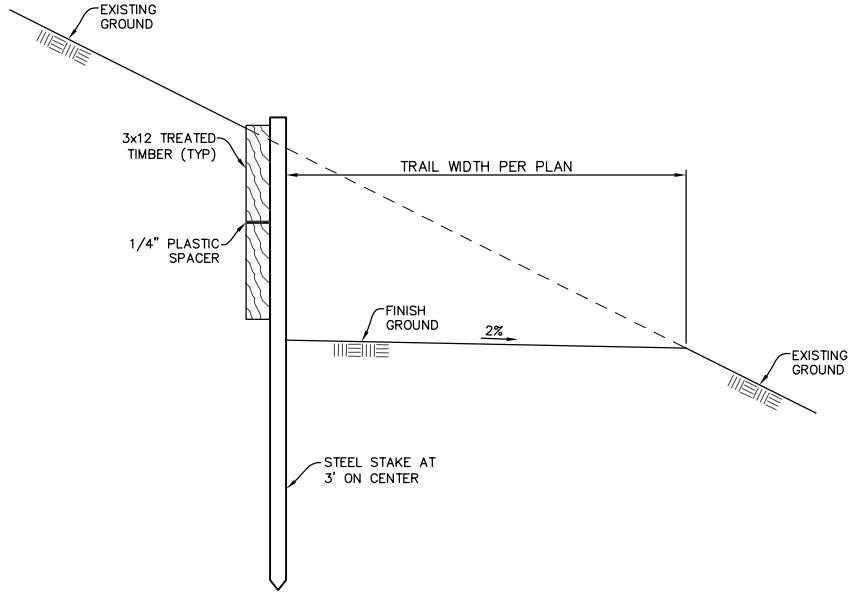


## TIMBER TRAIL WALL (T)
N.T.S

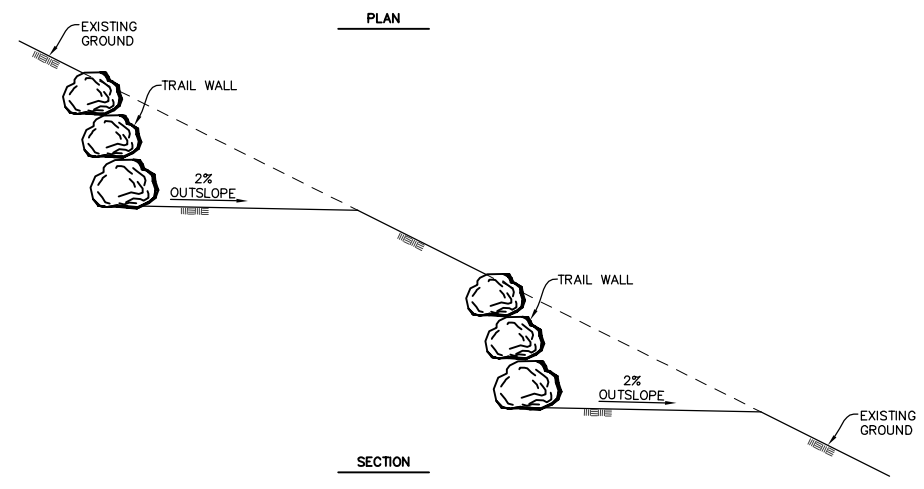


## TYPICAL CLIMBING TURN (U)
N.T.S

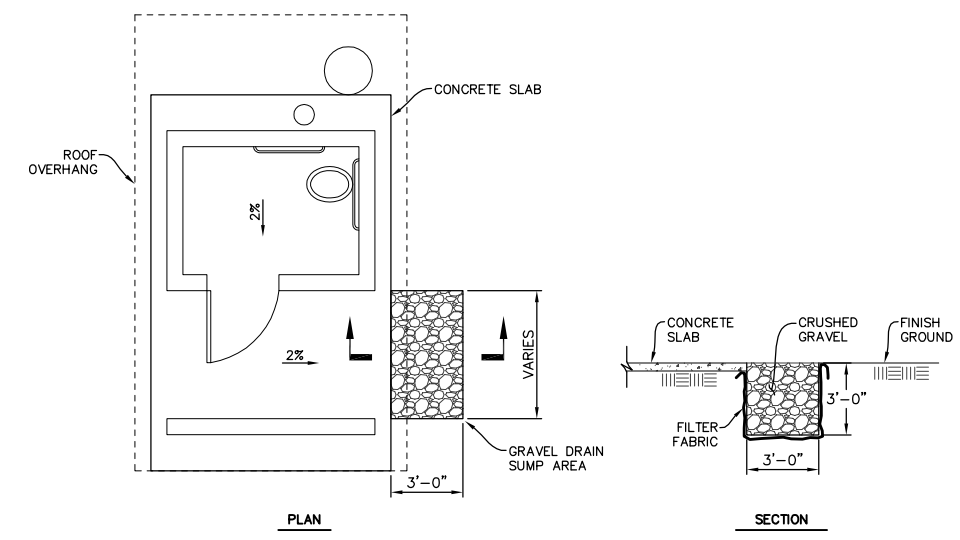


## TYPICAL RESTROOM LAYOUT (V)
N.T.S

# CONCEPT - REDESIGN ALTERNATIVE


DUDEK
621 CHAPALA STREET
SANTA BARBARA, CA 93101
(805) 963–0651


| NO. | DATE | REVISIONS | APPD. |
|---|---|---|---|
| | | | |


Penfield & Smith
Engineers · Surveyors · Planners · Construction Management ·
111 East Victoria Street, Santa Barbara, CA 93101
Phone: (805) 963–9532 Fax: (805) 966–9801


DESIGN JHC CHECKED BEF
BRET. E. FOSTER DATE:
PROJECT ENGINEER
R.C.E. 48,267 (EXP. 06–30–08 )

TRAIL AND GRADING DETAILS
–
SANTA MONICA MOUNTAINS CONSERVANCY
MALIBU, CALIFORNIA

P&S PROJECT NO. 13638.05
SHEET 37 OF 63
PLAN DATE JANUARY 15, 2010


34–ENG SAVE DATE: 1/15/2010 10:12:58 AM PLOT BY:Michael Osborn PLOT DATE:1/15/2010 11:15:55 AM PLOT SCALE:1:2.73
DRAWING:r:\acad\work\13638\civil\redesign alt 1–15–10\13638_redesign_35–38_details.dwg