Cross Section A–A ALIGNMENT
VERTICAL EXAGGERATION 5x

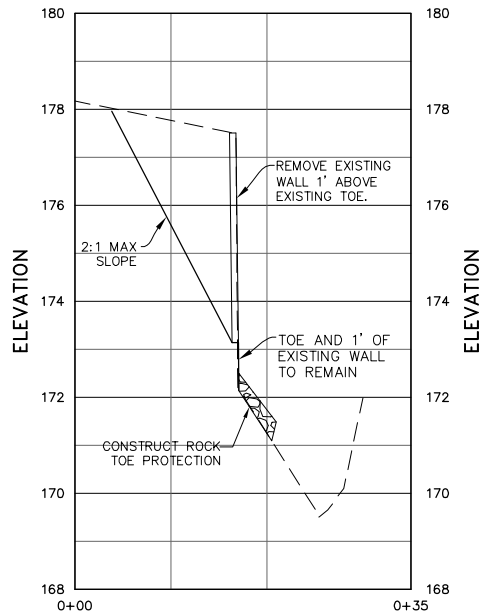

STATION 10+46 (54 / –)

Cross Section B–B ALIGNMENT
VERTICAL EXAGGERATION 5x

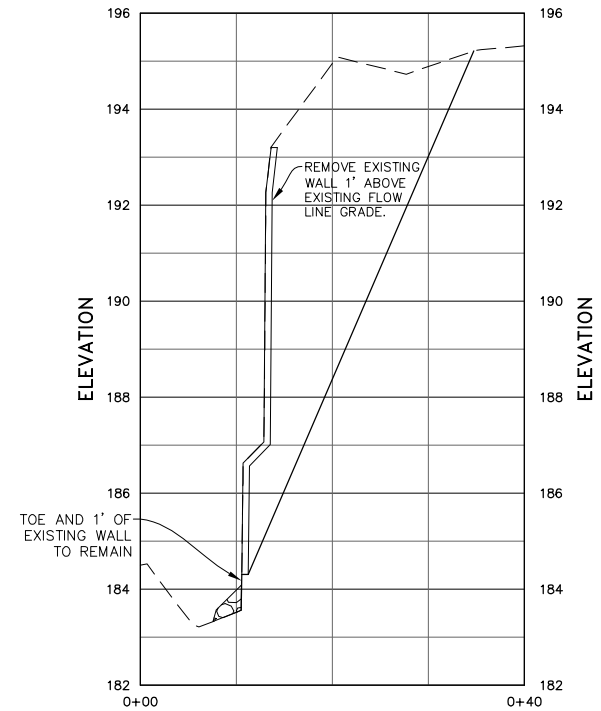

STATION 14+27 (56 / –)

Cross Section D–D ALIGNMENT
VERTICAL EXAGGERATION 5x

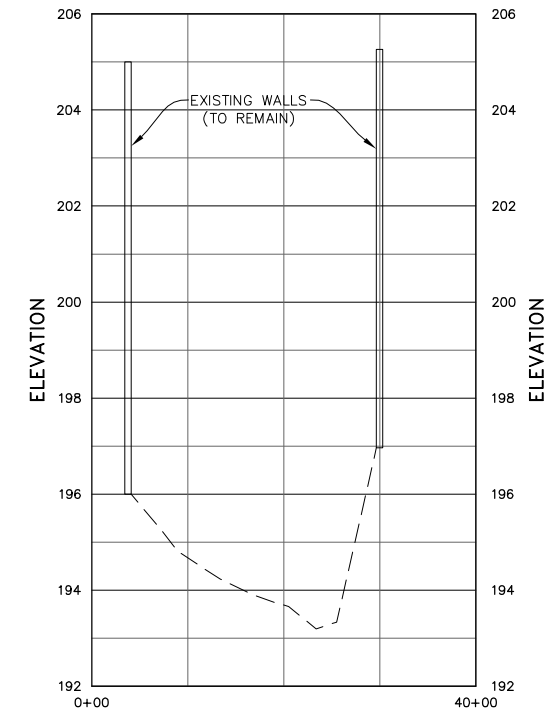

STATION 17+97 (57 / –)

WALL CONSTRUCTION NOTES

1. CONSTRUCT 4" PERFORATED PIPE WRAPPED IN FILTER FABRIC AND 12"x12" GRAVEL AND AT TOP OF FOOTING. DRAIN TO DAYLIGHT AT MINIMUM 1% SLOPE. PERFORATIONS SHALL BE PLACED DOWN AT THE POSITIONS OF 5 AND 7 O'CLOCK.
2. OVEREXCAVATE AND RECOMPACT SUBGRADE MINIMUM 2' BEYOND AND BELOW WALL FOUNDATION LIMITS.
3. PROVIDE GRANULAR, NON–EXPANSIVE IMPORT BACKFILL, AS APPROVED BY PROJECT SOILS ENGINEER, AT 1:1 SLOPE FROM TOP OF FOOTING TO WITHIN 12" OF FINISH GRADE. ALL SOIL BACKFILL SHALL BE COMPACTED TO A MINIMUM 90% RELATIVE COMPACTION. TOP 12" OF FINAL BACKFILL SHALL BE TOPSOIL.

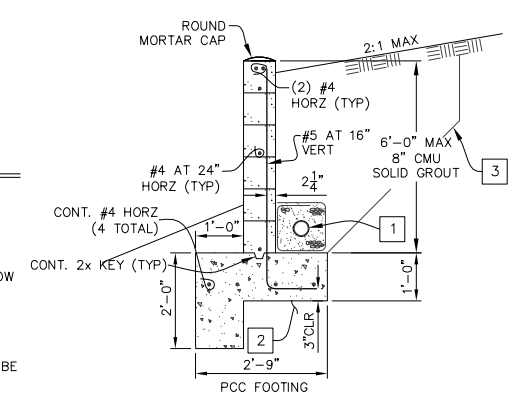

TYPICAL RETAINING WALL (AG / –)
SCALE: 1" = 2'

CONCEPT - REDESIGN ALTERNATIVE

NO.	DATE	REVISIONS	APPD.

Penfield & Smith
Engineering · Surveying · Planning · Construction Management ·
111 East Victoria Street, Santa Barbara, CA 93101
Phone: (805) 963–9532 Fax: (805) 966–9801

DESIGN TAR CHECKED BEF
CRAIG A. STEWARD DATE: 09/30/09
PROJECT ENGINEER
R.C.E. 37,253 (EXP. 06–30–10)

CROSS SECTION
RAMIREZ CREEK RESTORATION/ENHANCEMENT
SANTA MONICA MOUNTAINS CONSERVANCY
MALIBU, CALIFORNIA

P&S PROJECT NO. 13638.07
SHEET 62 OF 63
PLAN DATE JANUARY 15, 2010

34–ENG SAVE DATE: 1/15/2010 10:40:13 AM PLOT BY:Michael Osborn PLOT DATE:1/15/2010 10:49:27 AM PLOT SCALE:1:79.86
DRAWING:r:\acad\work\13638\civil\redesign alt 1–15–10\13638_redesign_53–63_ramirez creek.dwg