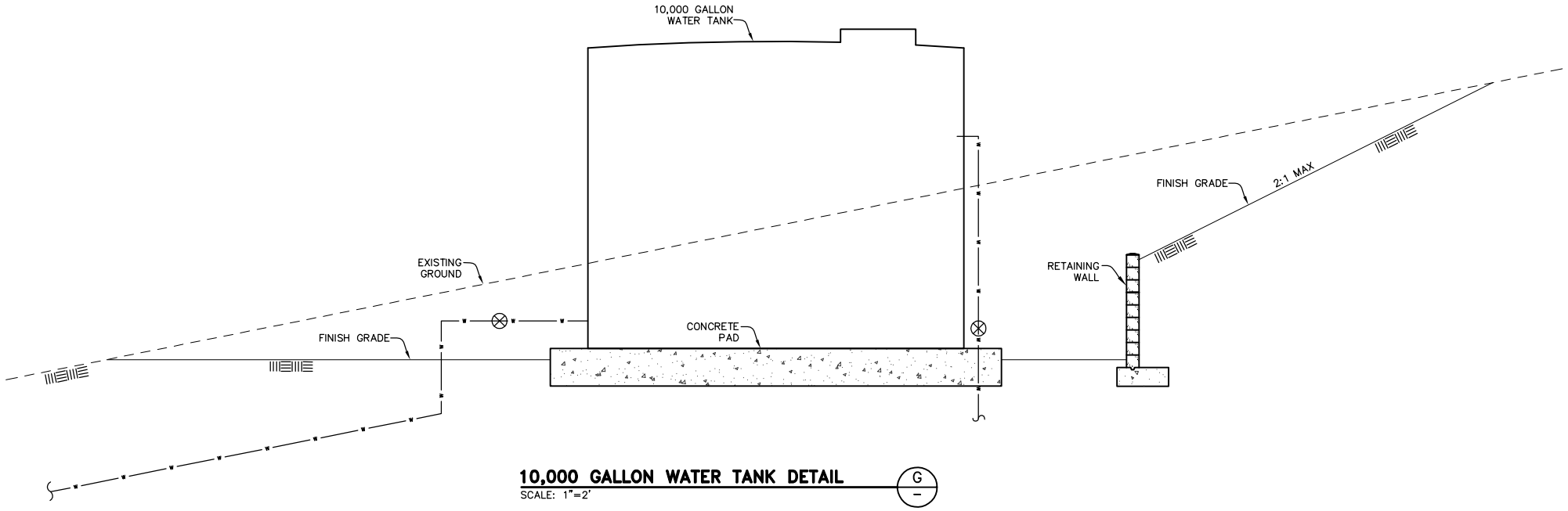

10,000 GALLON WATER TANK DETAIL (G)
SCALE: 1"=2'

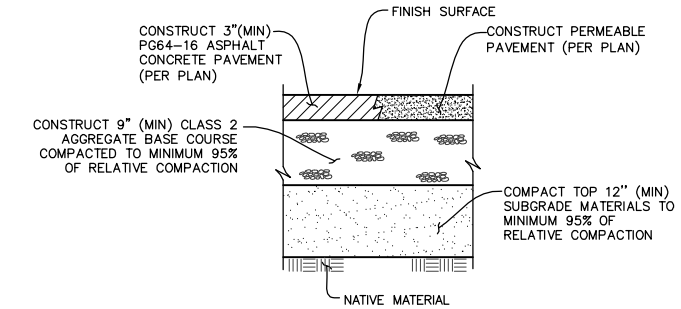

PAVEMENT STRUCTURAL SECTION (H)
SCALE: N.T.S.

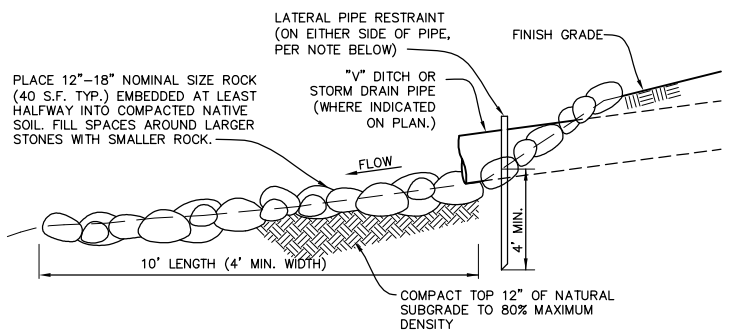

NOTE:
INSTALL LATERAL PIPE RESTRAINTS APPROXIMATELY 2' UPSTREAM FROM THE END OF THE PIPE. ONE ON EACH SIDE. RESTRAINTS SHALL BE MIN. 3" DIAMETER GALVANIZED PIPE, 6' LONG, DRIVEN A MINIMUM OF 4' INTO GROUND. TOP OF 3" PIPE SHALL BE CAPPED.

ROCK RIP-RAP OUTFALL (J)
SCALE: N.T.S.

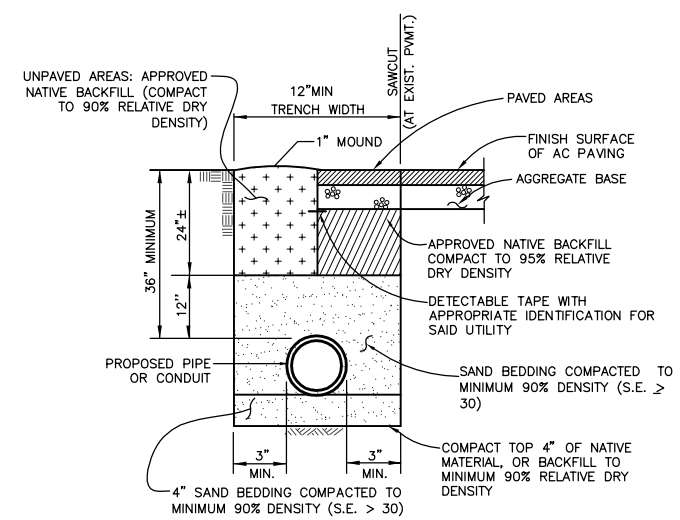

NOTE: CONTRACTOR SHALL VERIFY EXISTING UTILITIES BY POTHOLING PRIOR TO CONSTRUCTION AND MAKE NECESSARY ADJUSTMENTS TO THE UTILITY CONSTRUCTION

TYPICAL UTILITY TRENCH SECTION (K)
N.T.S.

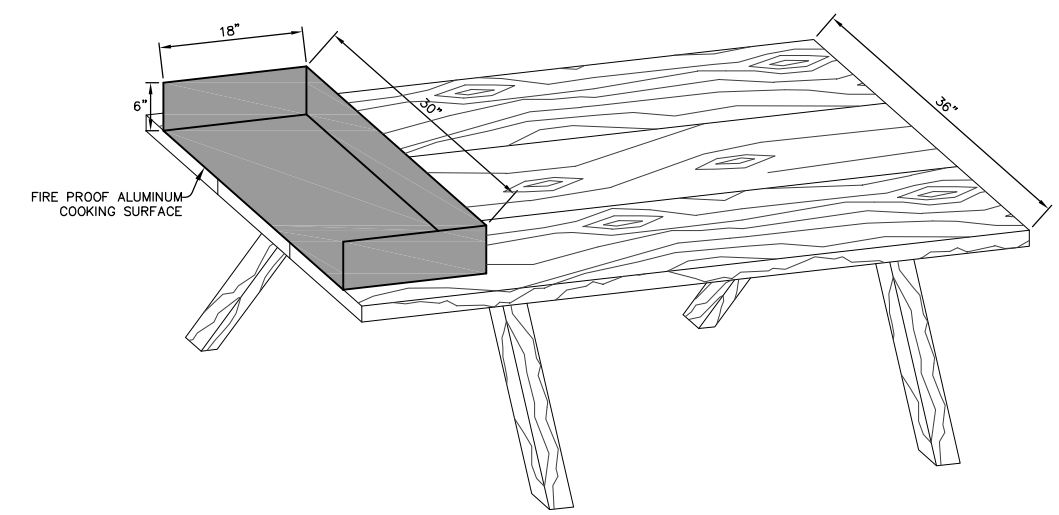

COOKING SURFACE DETAIL (L)
N.T.S.

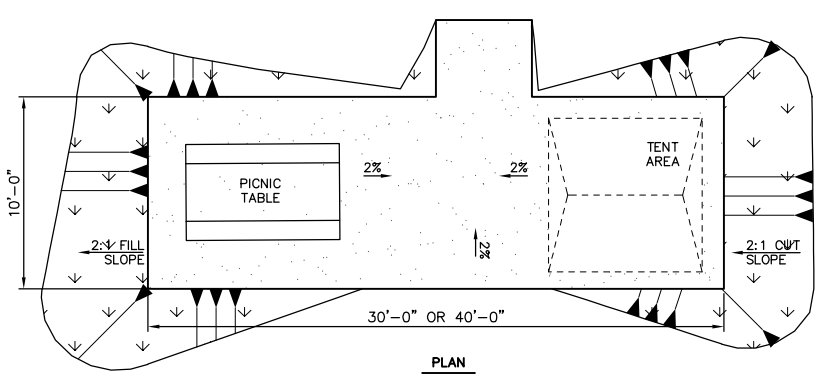

TYPICAL SMALL CAMPSITE TYPE 2 (M)
SCALE: 1" = 5'

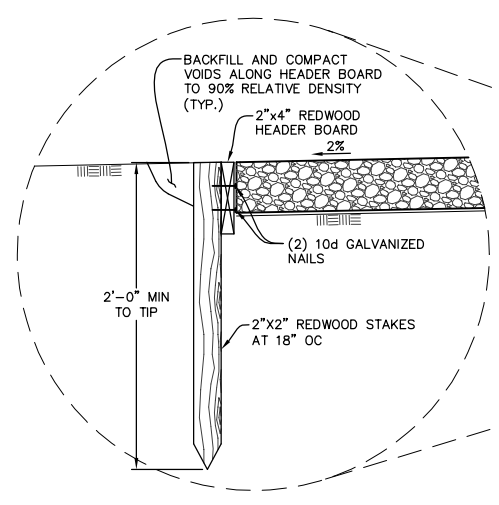

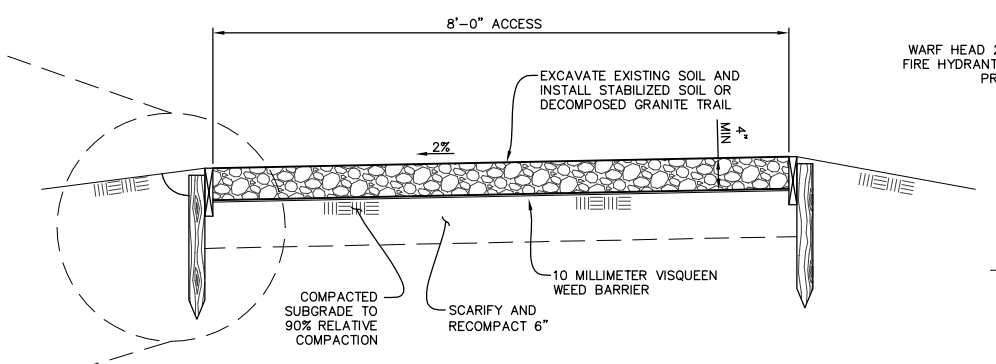

TYPICAL GRAVEL ACCESS SECTION (N)
N.T.S

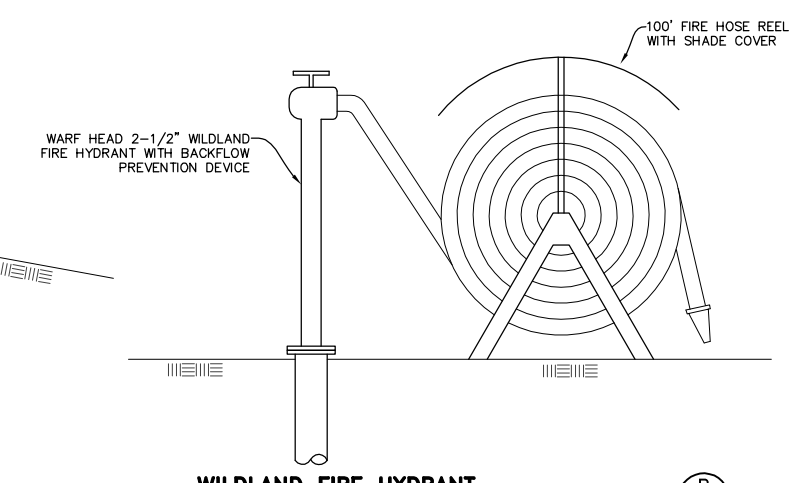

WILDLAND FIRE HYDRANT (P)
N.T.S

CONCEPT - MODIFIED REDESIGN ALTERNATIVE

FOR REDUCED PLANS
ORIGINAL SCALE IN INCHES
0 1 2 3

DUDEK
621 CHAPALA STREET
SANTA BARBARA, CA 93101
(805) 963-0651

NO.	DATE	REVISIONS	APPD.

Penfield & Smith
Engineers · Surveyors · Planners · Construction Management ·
111 East Victoria Street, Santa Barbara, CA 93101
Phone: (805) 963-9532 Fax: (805) 966-9801

DESIGN JHC/BTF CHECKED BEF
BRET FOSTER DATE:
PROJECT ENGINEER
R.C.E. 48,267 (EXP. 06-30-12)

TRAIL AND GRADING DETAILS
–
SANTA MONICA MOUNTAINS CONSERVANCY
MALIBU, CALIFORNIA

P&S PROJECT NO. 13638.05
SHEET 36 OF 63
PLAN DATE JUNE 25, 2010

34-ENG SAVE DATE: 6/27/2010 5:01:30 PM PLOT BY:Scott Smith PLOT DATE:6/27/2010 5:05:29 PM PLOT SCALE:1:2.73
DRAWING:r:\acad\work\13638\civil\3-mra\13638_mra_35-38_details.dwg