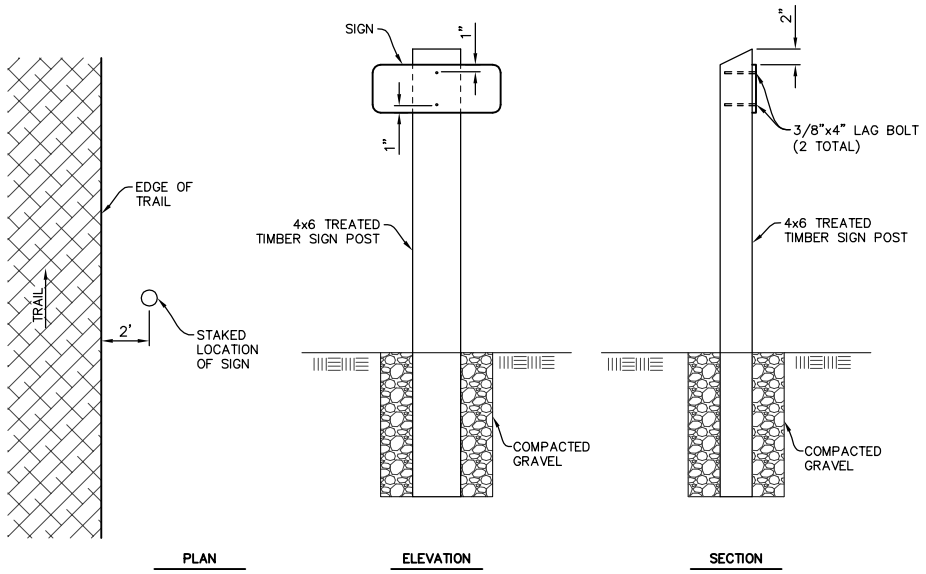

SIGN AND POST DETAIL

N.T.S

Q
–

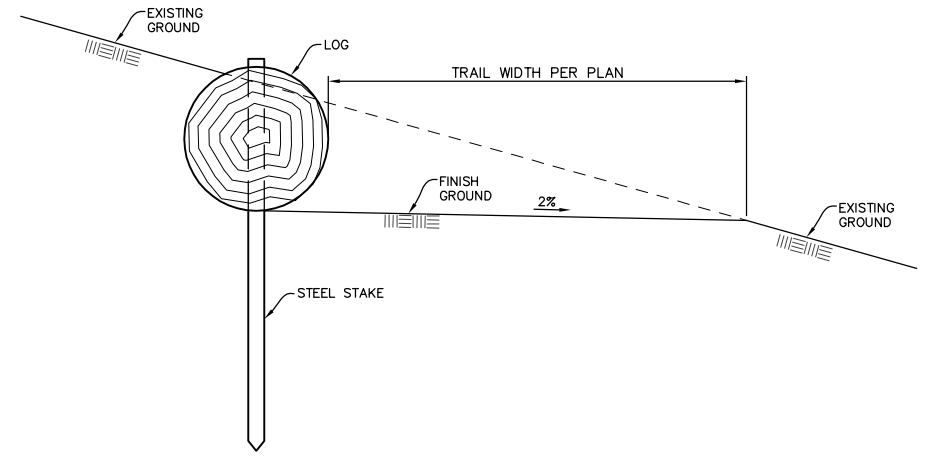

LOG TRAIL WALL

N.T.S

R
–

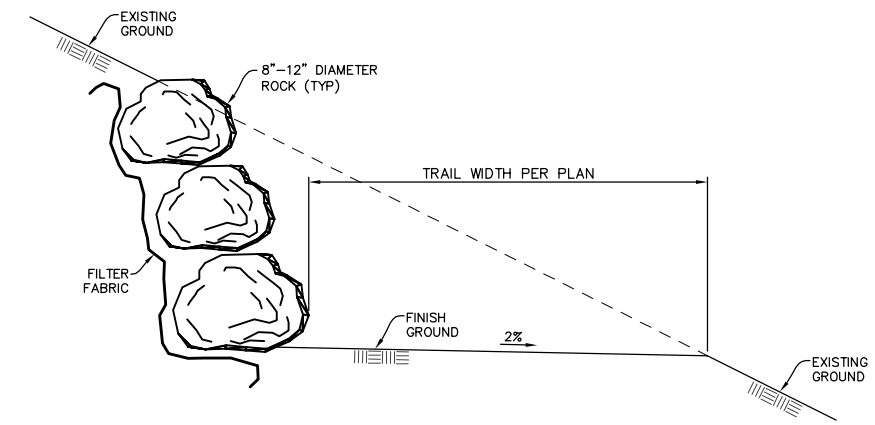

STACKED ROCK TRAIL WALL

N.T.S

S
–

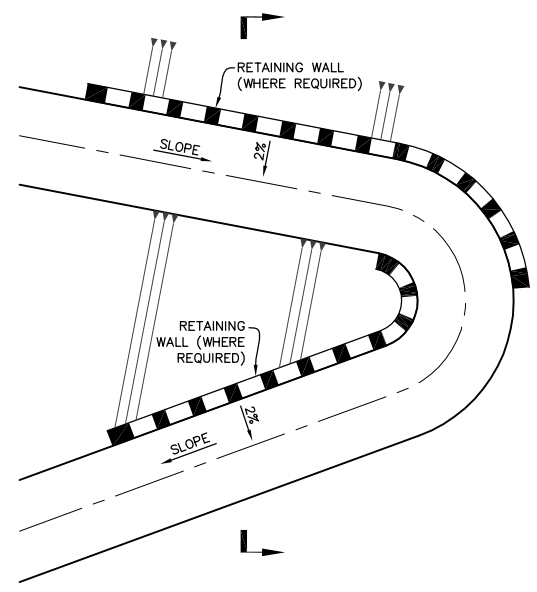

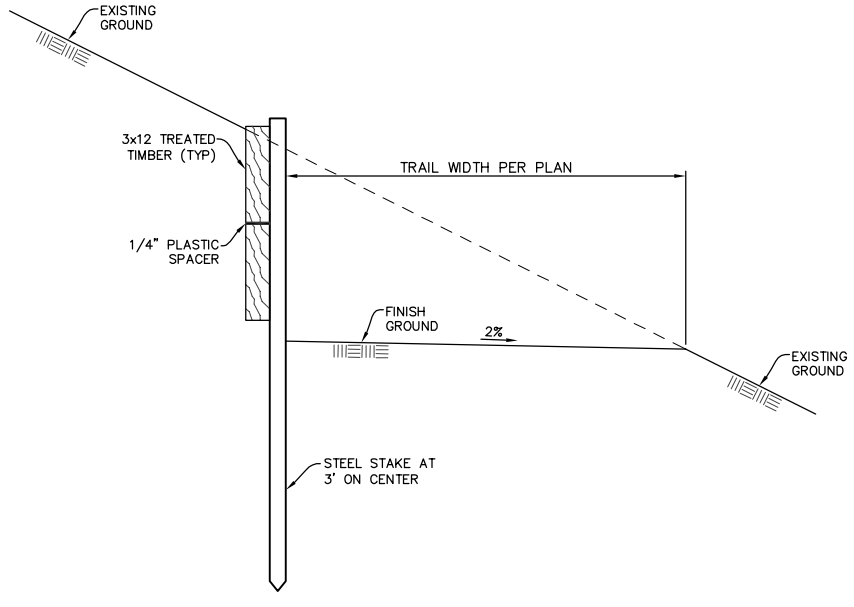

TIMBER TRAIL WALL

N.T.S

T
–

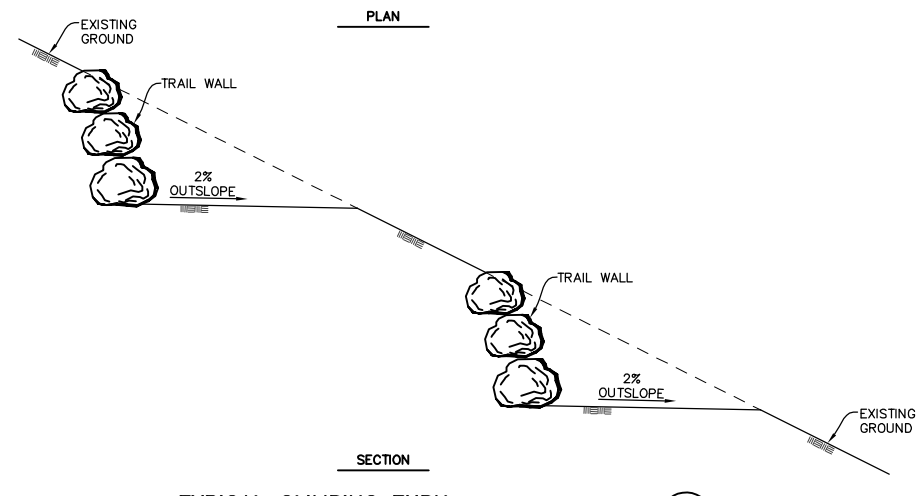

TYPICAL CLIMBING TURN

N.T.S

U
–

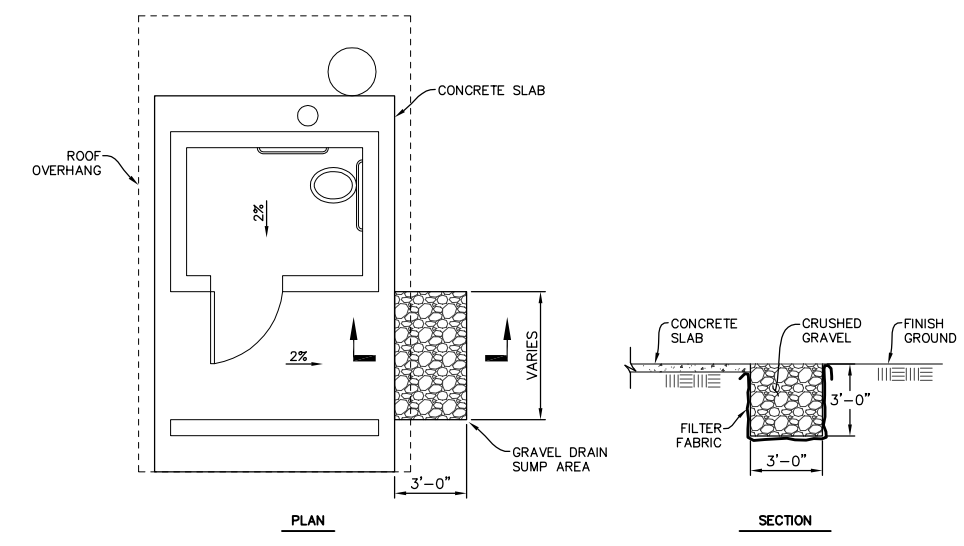

TYPICAL RESTROOM LAYOUT

N.T.S

V
–

CONCEPT - MODIFIED REDESIGN ALTERNATIVE

FOR REDUCED PLANS
ORIGINAL SCALE IN INCHES
0 1 2 3

DUDEK
621 CHAPALA STREET
SANTA BARBARA, CA 93101
(805) 963–0651

NO.	DATE	REVISIONS	APPD.

Penfield & Smith
Engineers · Surveyors · Planners · Construction Management ·
111 East Victoria Street, Santa Barbara, CA 93101
Phone: (805) 963–9532 Fax: (805) 966–9801

DESIGN JHC CHECKED BEF
BRET FOSTER DATE:
PROJECT ENGINEER
R.C.E. 48,267 (EXP. 06–30–12)

TRAIL AND GRADING DETAILS
–
SANTA MONICA MOUNTAINS CONSERVANCY
MALIBU, CALIFORNIA

P&S PROJECT NO. 13638.05
SHEET 37 OF 63
PLAN DATE JUNE 25, 2010

34–ENG SAVE DATE: 6/27/2010 5:01:30 PM PLOT BY:Scott Smith PLOT DATE:6/27/2010 5:05:18 PM PLOT SCALE:1:2.73

DRAWING:r:\acad\work\13638\civil\3–mra\13638_mra_35–38_details.dwg