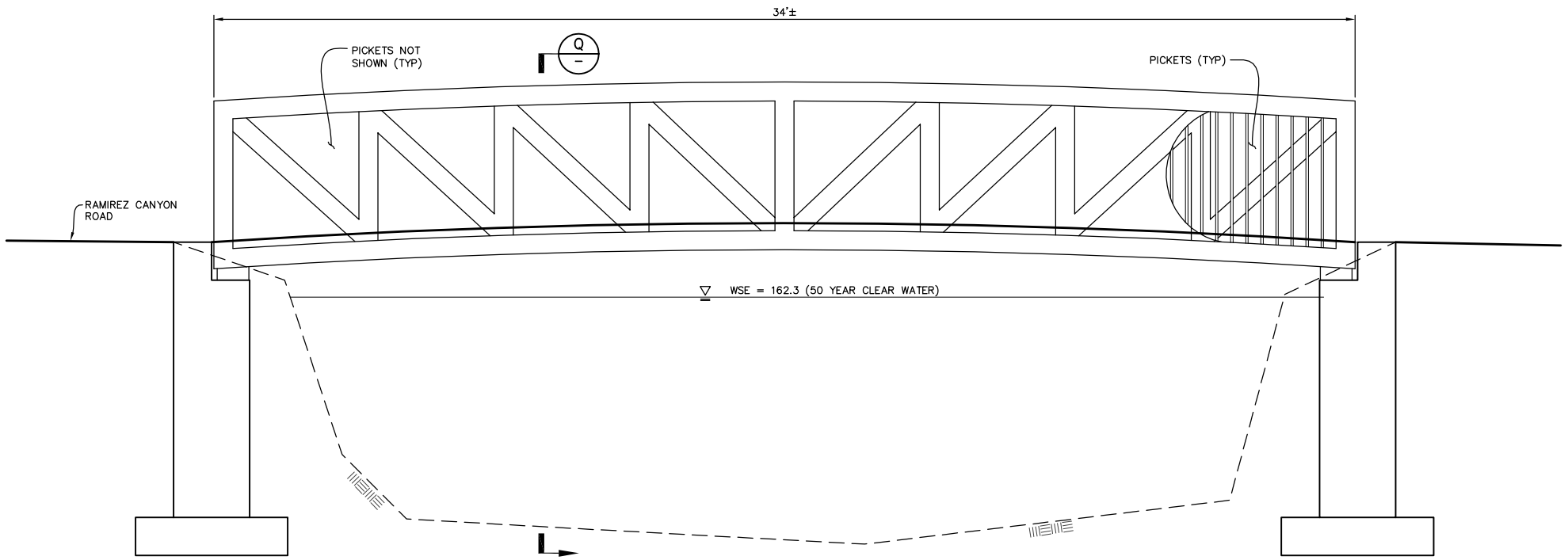


**BRIDGE ELEVATION** (AB –)
SCALE: 1" = 2'

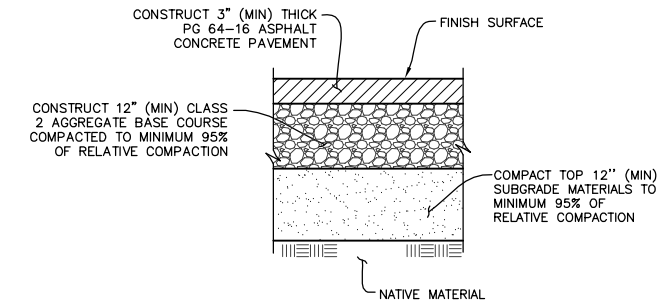


**ROAD ASPHALT CONCRETE PAVEMENT STRUCTURAL SECTION** (AD –)
SCALE: N.T.S.

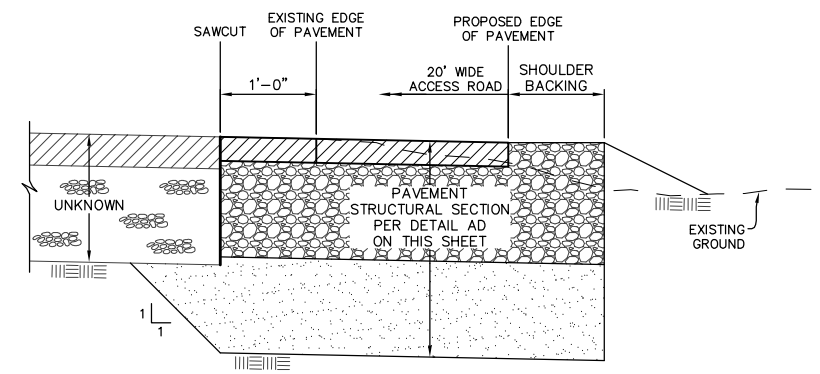


**SAWCUT DETAIL** (AE –)
SCALE: N.T.S.

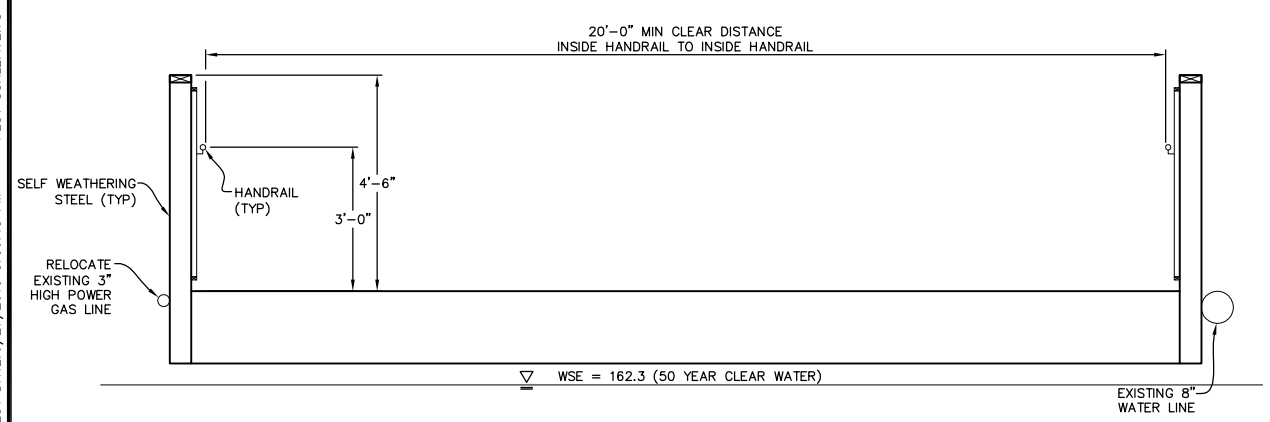


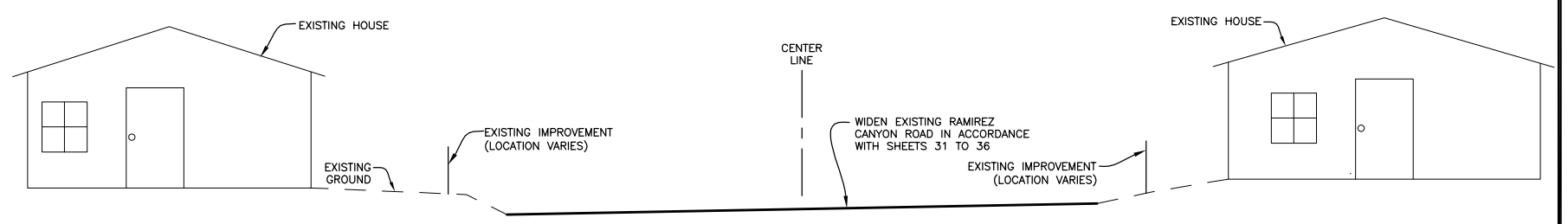


**ROAD WIDENING** (AF –)
SCALE: NTS

**BRIDGE CROSS SECTION** (AC –)
SCALE: 1" = 2'

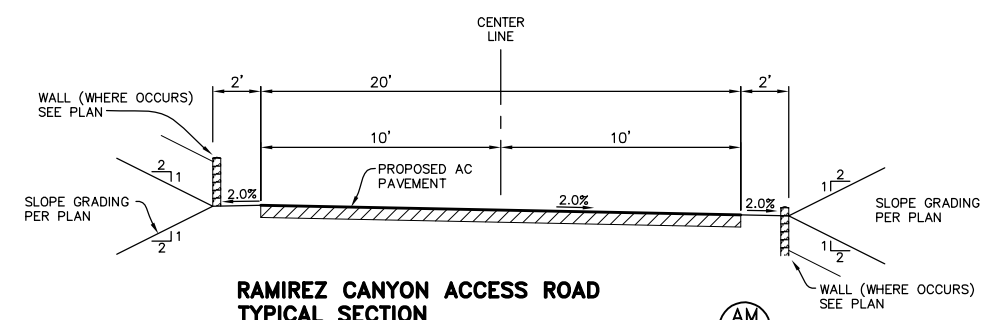


**RAMIREZ CANYON ACCESS ROAD TYPICAL SECTION** (AM –)
SCALE: NTS

# CONCEPT - MODIFIED REDESIGN ALTERNATIVE

FOR REDUCED PLANS
ORIGINAL SCALE IN INCHES
0 1 2 3

DUDEK
621 CHAPALA STREET
SANTA BARBARA, CA 93101
(805) 963-0651

| NO. | DATE | REVISIONS | APPD. |
|---|---|---|---|
| | | | |

Penfield & Smith
Engineers · Surveyors · Planners · Construction Management ·
111 East Victoria Street, Santa Barbara, CA 93101
Phone: (805) 963-9532 Fax: (805) 966-9801

DESIGN JHC CHECKED BEF
BRET FOSTER DATE:
PROJECT ENGINEER
R.C.E. 48,267 (EXP. 06-30-12)

ROAD DETAILS
–
SANTA MONICA MOUNTAINS CONSERVANCY
MALIBU, CALIFORNIA

P&S PROJECT NO. 13638.05
SHEET 50 OF 63
PLAN DATE JUNE 25, 2010

34-ENG SAVE DATE: 6/27/2010 5:06:15 PM PLOT BY:Scott Smith PLOT DATE:6/27/2010 5:06:18 PM PLOT SCALE:1:2.73
DRAWING:r:\acad\work\13638\civil\3-mra\13638_mra_50_details.dwg